JCI The Journal of Clinical Investigation

Mapping the gene causing X-linked recessive idiopathic hypoparathyroidism to Xq26-Xq27 by linkage studies.

R V Thakker, … , C Wooding, J L O'Riordan

J Clin Invest. 1990;86(1):40-45. https://doi.org/10.1172/JCI114712.

Research Article

Idiopathic hypoparathyroidism has been reported to occur as an X-linked recessive disorder in two multigeneration kindreds. Affected individuals, who are males, suffer from infantile onset of epilepsy and hypocalcemia, which appears to be due to an isolated congenital defect of parathyroid gland development; females are not affected and are normocalcemic. We have performed linkage studies in these two kindreds (5 affected males, 11 obligate carrier females, and 44 unaffected members) and have used cloned human X chromosome sequences identifying restriction fragment length polymorphisms to localize the mutant gene causing this disorder. Our studies established linkage between the X-linked recessive idiopathic hypoparathyroid gene (HPT) and the DXS98 (4D.8) locus, peak LOD score = 3.82 (theta = 0.05), thereby mapping HPT to the distal long arm of the X chromosome (Xq26-Xq27). Multilocus analysis indicated that HPT is proximal to the DXS98 (4D.8) locus but distal to the F9 (Factor IX) locus, thereby revealing bridging markers for the disease. The results of this study will improve genetic counseling of affected families, and further characterization of this gene locus will open the way for elucidating the factors controlling the development and activity of the parathyroid glands.

Find the latest version:

https://jci.me/114712/pdf

Mapping the Gene Causing X-linked Recessive Idiopathic Hypoparathyroidism to Xq26–Xq27 by Linkage Studies

R. V. Thakker,* K. E. Davies,‡ M. P. Whyte,§ C. Wooding,* and J. L. H. O'Riordan*

**The Department of Medicine, The Middlesex Hospital, London W1N 8AA, United Kingdom; ‡The Nuffield Department of Clinical Medicine, John Radcliffe Hospital, Headington, Oxford OX3 9DU, United Kingdom; and §Metabolic Research Unit, Shriners Hospital for Crippled Children, and the Departments of Medicine and Pediatrics, Washington University Medical Center, St. Louis, Missouri 63110*

Abstract

Idiopathic hypoparathyroidism has been reported to occur as an X-linked recessive disorder in two multigeneration kindreds. Affected individuals, who are males, suffer from infantile onset of epilepsy and hypocalcemia, which appears to be due to an isolated congenital defect of parathyroid gland development; females are not affected and are normocalcemic. We have performed linkage studies in these two kindreds (5 affected males, 11 obligate carrier females, and 44 unaffected members) and have used cloned human X chromosome sequences identifying restriction fragment length polymorphisms to localize the mutant gene causing this disorder. Our studies established linkage between the X-linked recessive idiopathic hypoparathyroid gene (HPT) and the DXS98 (4D.8) locus, peak LOD score = 3.82 (θ = 0.05), thereby mapping HPT to the distal long arm of the X chromosome (Xq26–Xq27). Multilocus analysis indicated that HPT is proximal to the DXS98 (4D.8) locus but distal to the F9 (Factor IX) locus, thereby revealing bridging markers for the disease. The results of this study will improve genetic counseling of affected families, and further characterization of this gene locus will open the way for elucidating the factors controlling the development and activity of the parathyroid glands. (*J. Clin. Invest.* 1990. 86:40–45.)

Key words: DNA linkage studies • X-linked hypoparathyroidism

Introduction

Hypoparathyroidism is an endocrine disorder in which hypocalcemia and hyperphosphatemia are the results of a deficiency in parathyroid hormone (PTH) secretion. There are a variety of causes of hypoparathyroidism and the disorder may occur after trauma to the parathyroids during neck surgery, as part of a pluriglandular autoimmune disorder, or as a congenital defect, for example in the DiGeorge syndrome. In addition, hypoparathyroidism may develop as a solitary endocrinopathy, and this form has been called isolated or idiopathic hypoparathyroidism. Familial occurrences of idiopathic hypoparathyroidism have been reported and autosomal dominant (1), autosomal recessive (2), and X-linked recessive (3, 4) inheritances have been established (5). The investigation of the genetic defects in these hereditary disorders of isolated PTH deficiency has been facilitated by the recent advances in molecular biology. Human PTH, which is an 84 amino acid polypeptide (6), is encoded by a single gene located on the short arm of chromosome 11 (7). It has been postulated that mutations either within or near the PTH gene, or at other loci, which affect the embryological development, cell structure, or regulation of the parathyroids, may cause this reduction in parathyroid gland activity (8). An abnormality within the PTH gene itself has been identified in a patient with autosomal dominant idiopathic hypoparathyroidism (9). However, in other patients with inherited forms of idiopathic hypoparathyroidism, genetic abnormalities within the PTH gene have not been detected (8, 10) and mutations at other loci need to be sought. We have undertaken family linkage studies using cloned human X chromosome sequences identifying restriction fragment length polymorphisms (RFLPs),[1] and have mapped the gene causing X-linked recessive idiopathic hypoparathyroidism (HPT). This localization of the mutation represents a major step toward defining the primary defect causing this X-linked recessive disorder of calcium homeostasis and elucidating the genetic factors involved in the embryological development of the parathyroid glands.

Methods

Families. Two kindreds from the state of Missouri, in whom idiopathic hypoparathyroidism had been inherited in an X-linked recessive manner in five or more generations (3, 4), were ascertained for linkage studies. These two kindreds appeared to be unrelated, as a common ancestor was not identified after extensive genealogy dating to the mid-1800s. The family reported by Peden in 1960 (3) was designated family P/60, and that reported by Whyte and Weldon in 1981 (4) was designated family W/81. The disorder occurred in males only, who suffered in the neonatal or early infantile periods from hypocalcemic seizures that were invariably fatal if the hypocalcemia remained uncorrected. Further investigations of these male patients revealed undetectable circulating immunoreactive PTH concentrations and a normal renal response to bovine PTH extract. In addition, autopsy of an affected teenage boy from family P/60 indicated that the deficiency in PTH was the result of parathyroid gland agenesis (1). Clinical immunodeficiency was not observed in any of the affected individuals. Unaffected relatives had no history of epilepsy and were normocalcemic. Females were classified as carriers of X-linked recessive idiopathic hypoparathyroidism only if males in subsequent generations manifested the disease. Venous blood was obtained, after informed consent, from 60 family members; 5 were affected males, 11 were carrier females, and 44 were unaffected (26 males, 18 females). Of the 60 members, 50 (4 affected, 7 carriers, and 39 unaffected) were from four generations of kindred W/81 and 10 (1 affected, 4 carriers, and 5 unaffected) were from three generations of kindred P/60.

Methods. Venous blood samples were collected in tubes containing EDTA and kept frozen at −70°C. Leukocyte DNA was prepared by

Address correspondence to Dr. R. V. Thakker, Division of Molecular Medicine, Clinical Research Centre, Watford Road, Harrow, Middlesex HA1 3UJ, UK.

Received for publication 7 November 1989 and in revised form 2 March 1990.

J. Clin. Invest.
© The American Society for Clinical Investigation, Inc.
0021-9738/90/07/0040/06 $2.00
Volume 86, July 1990, 40–45

1. *Abbreviations used in this paper:* HPT, X-linked recessive idiopathic hypoparathyroidism; LOD score, $\log_{10}$ odds ratio favoring linkage; RFLP, restriction fragment length polymorphism.

standard methods (12) and 5 μg DNA was digested to completion with a fourfold excess of one of the following restriction enzymes: Eco RI, Pvu II, Pst I, Eco RV, Taq I, Msp I, Bgl I, Hind III, or Bgl II (Boehringer Mannheim Biochemicals, Indianapolis, IN, or Pharmacia Fine Chemicals, Piscataway, NJ). The resulting fragments were separated by 0.8–1.0% agarose gel electrophoresis and transferred to a nylon membrane (Hybond-N; Amersham Corp., Arlington Heights, IL) by Southern blotting (13). DNA probes were labeled using α-[^{32}P]-dCTP by nick translation (14) or by oligonucleotide-primed synthesis (15). A total of 17 cloned DNA probes from the X chromosome were used in the linkage studies (Fig. 1). 7 of these probes (782, D2, 99.6, C7, 754, pOTC, and L1.28) were from the short arm and 10 others (pDp34, 30RIb, pX45h, 52A, FIX [Factor IX], CX55.7, 4D.8, Mn12, St14, and DX13) were from the long arm of the X chromosome. These polymorphic probes define the loci DXS85, DXS43, DXS41, DXS28, DXS84, OTC, DXS7, DXYS1, DXS37, DXS100, DXS51, F9, DXS105, DXS98, DXS33, DXS52, and DXS15, respectively (Fig. 1). The details of these probes and references are given by Davies et al. (17). The Southern blot was hybridized as described previously (18). Autoradiography with dual intensifying screens and preflashed Fuji medical x-ray films was performed at −70°C for 1–5 d to reveal the RFLPs.

Linkage analysis. The numbers of crossover events (or recombinants) that occurred between HPT and each DNA marker locus on the X chromosome were determined since these reflect the genetic distances between HPT and each marker locus. The ratio of recombinants to the total number of offspring is the recombination fraction (θ), whose value ranges from 0 to 0.5. A value of 0 indicates that the loci are very closely linked, while a value of 0.5 indicates that the loci are far apart and not linked. The probability that two loci are linked is expressed as a "LOD score," which is $\log_{10}$ of the odds ratio favoring linkage. A LOD score of +3, which indicates a probability in favor of linkage of 1,000:1, establishes linkage between two loci, and a LOD score of −2, indicating a probability against linkage of 100:1, is taken to exclude linkage between two loci. The odds ratio favoring linkage is defined as the likelihood that the two loci are linked at a specified recombination (θ) versus the likelihood that the loci are not linked (i.e., $\theta = 0.5$). LOD scores are evaluated over a range of θ, thereby enabling the genetic distance and maximum (or peak) probability favoring linkage between the two loci to be ascertained. The recombination value (θ) at which the peak LOD score (Z) is obtained yields the best estimate of the genetic distance (d) between the two loci. These calculations were performed using the computer programs MLINK and ILINK (19) from LINKAGE (version 4.7). The frequency of idiopathic hypoparathyroidism was estimated to be 10^{-4}, and the RFLP allele frequencies used were previously published values (17). Varying the disease frequency had no effect on the results of the linkage analysis.

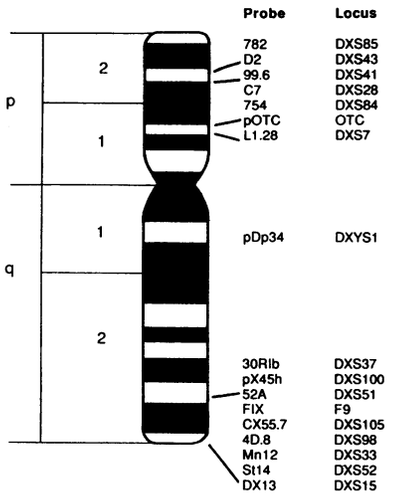

Figure 1. Map of some clinically useful DNA probes on the human X chromosome, which is schematically represented with Giemsa bands. The short arm is designated 'p' and the long arm is designated 'q'. The DNA probes are cloned human X chromosome sequences and are shown juxtaposed to their region of origin. The region from which each DNA probe is derived is ascertained by in situ hybridization, by the use of somatic cell hybrids, or by linkage studies. Each DNA probe of unknown function is assigned a locus number; for example, the DNA probe 4D.8 is assigned DXS98. This indicates that DXS98 is a DNA sequence (D) from the X chromosome (X) detecting a single (S) DNA segment in the haploid genome, and is designated the number 98 by the Human Gene Mapping Committee (16). DNA probes of known function are allocated gene symbols; for example, the genes encoding ornithine carbamoyltransferase and coagulation Factor IX are assigned OTC and F9, respectively. These DNA probes, which reveal RFLPs, were used as genetic markers in linkage studies of families affected with X-linked recessive idiopathic hypoparathyroidism. Linkage between HPT and the DXS98 (4D.8) locus was established, thereby mapping HPT to the distal region of the long arm of the X chromosome (Xq26–Xq27).

Multipoint crossovers were analyzed to determine the order of genetic loci around HPT. The fixed framework of markers required for multilocus linkage analysis was deduced from previously published genetic maps (17, 20–26). Calculations of genetic distances for multilocus analysis were performed by converting published recombination frequencies (θ) to genetic distances (d) with Haldane's mapping function, $d = -0.5 \ln(1 - 2\theta)$, which assumes no interference. A maximum of seven loci (disease locus plus six markers) could be analyzed simultaneously with the LINKMAP program (27) using LINKAGE version 4.7 on a 64-megabyte Sun 4 computer running Sun OS4.0. The likelihood for each position of HPT within the fixed framework of genetic

Table I. LOD Scores for Linkage of X-linked Markers and HPT

		Peak		LOD scores Z (θ)						
Locus	Probe	$\hat{\theta}$	Z ($\hat{\theta}$)	Z (0.001)	Z (0.05)	Z (0.10)	Z (0.15)	Z (0.20)	Z (0.30)	Z (0.40)
DXS85	782	0.500	0.00	−4.99	−1.60	−1.01	−0.68	−0.46	−0.19	−0.05
DXS41	99.6	0.154	1.46	−2.13	1.02	1.38	1.46	1.41	1.13	0.66
DXS84	754	0.280	0.31	−8.08	−1.55	−0.49	−0.03	0.20	0.30	0.16
DXS7	L1.28	0.091	1.82	0.26	1.75	1.82	1.74	1.61	1.21	0.67
DXYS1	pDp34	0.406	0.03	−4.39	−1.09	−0.58	−0.33	−0.17	−0.02	0.03
DXS37	30RIb	0.226	0.88	−7.04	−0.53	0.36	0.73	0.86	0.79	0.45
DXS51	52A	0.000	0.73	0.73	0.68	0.62	0.56	0.50	0.35	0.19
F9	Factor IX	0.096	1.62	0.05	1.54	1.62	1.56	1.44	1.08	0.60
DXS98	4D.8	0.050	3.82	2.52	3.82	3.68	3.38	3.00	2.05	0.92
DXS52	St14	0.156	2.33	−4.81	1.49	2.17	2.33	2.26	1.76	0.95
DXS15	DX13	0.128	1.81	−1.63	1.49	1.78	1.80	1.69	1.26	0.63

markers was expressed as a location score, which was twice the natural logarithm of the odds ratio. The probability of the most likely gene order and the relative likelihoods of other gene orders were then ascertained from this location score curve. If, for a location score curve with marker framework A–B–C, the peak location scores x and y are obtained for the intervals A–B and B–C, respectively, then the relative likelihood that the disease maps in the interval A–B as opposed to B–C is given by $e^{0.5}$ (x–y).

Results

Members of family W/81 proved informative for 11 X-linked genetic markers, 4 from the short arm and 7 from the long arm, and the results of two-point linkage analysis are shown in Table I. The members from family P/60 proved uninformative and are therefore not included in the results shown in Table I. Linkage between HPT and the DXS98 (4D.8) locus was established with a peak LOD score of 3.82, a recombination fraction (θ) of 0.05, and a 95% confidence interval (0.001, 0.22), thereby localizing HPT to the distal long arm of the X chromosome (Xq26–Xq27). All the other X-linked RFLP loci gave negative or low LOD scores.

An analysis of recombination events within this distal segment of the long arm of the X chromosome helped to further localize the HPT locus. The pedigree in Fig. 2 shows 40 members (29 surviving and 11 deceased) in five generations from family W/81 with genetic marker data. The pedigree is informative for five X-linked RFLP loci, whose order in the region Xq25–Xq28 has been established as Xcen–DXS37–F9–DXS98–DXS52–DXS15–Xqter, and multipoint crosses exist. Individual IV.4 is a carrier mother who is heterozygous for F9, DXS98, DXS52, and DXS15, and the alleles which she has inherited from her mother (III.2) and father (III.1) can be ascertained by examination of her mother's (III.2) and unaffected brother's (IV.1) genotypes. Her affected son, V.2, shows

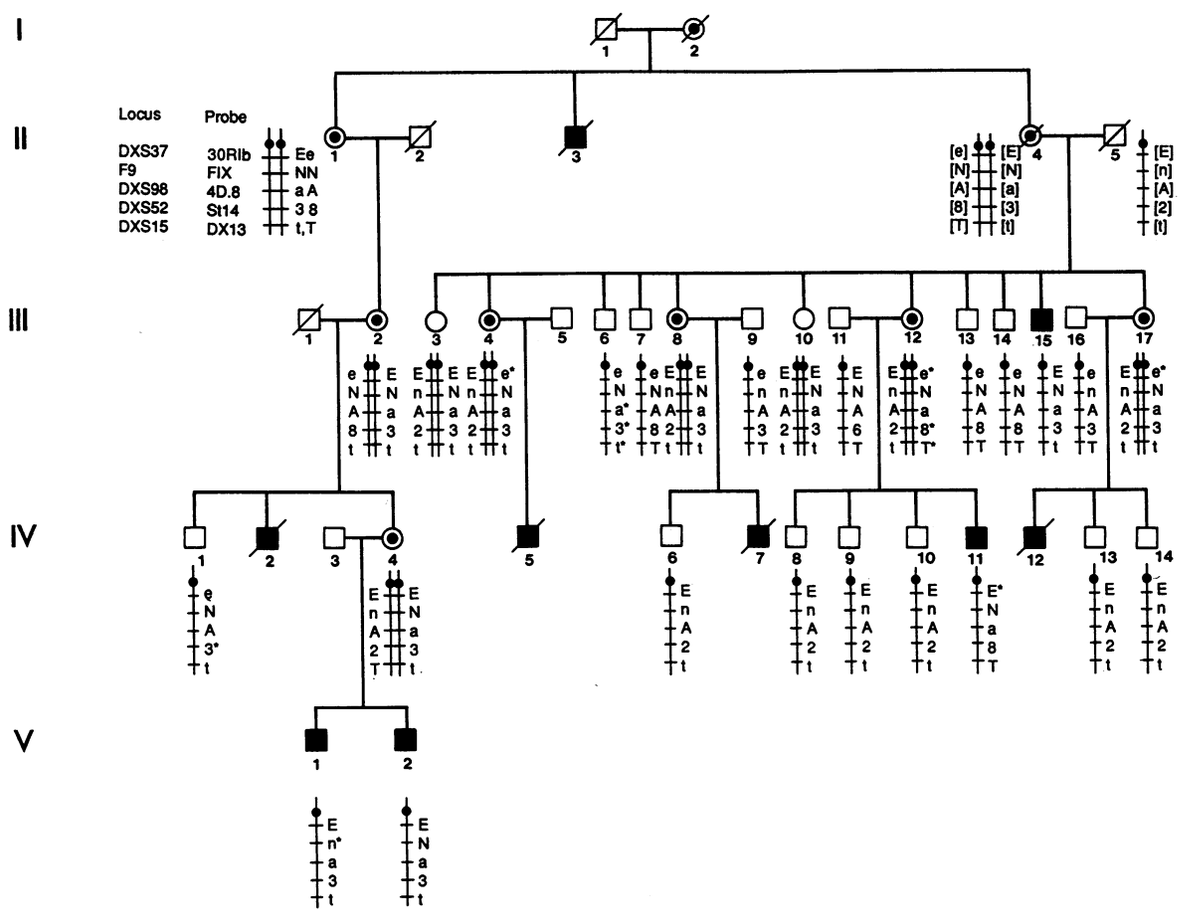

Figure 2. Pedigree from family W/81, segregating for X-linked recessive idiopathic hypoparathyroidism and distal long arm RFLP loci, whose respective alleles are indicated in parenthesis: DXS37 (Ee), F9 (Nn), DXS98 (Aa), DXS52 (2, 3, 6, 8), and DXS15 (Tt). The loci are shown in the correct order but not the correct distances apart. Individuals are represented as: unaffected male (□), affected male (■), unaffected female (○), and carrier female (◎). In some females, the inheritance of paternal and maternal alleles can be ascertained, and in these the paternal X chromosome is shown on the left. Recombinants between HPT and each allele are indicated by an asterisk. Deduced genotypes are shown in brackets.

Subject IV.4 is a carrier mother who is heterozygous for F9, DXS98, DXS52, and DXS15. Her affected son, V.1, is recombinant for HPT and the proximal locus F9, but nonrecombinant for DXS98, DXS52, and DXS15. Subject II.4 is a deceased carrier mother whose genotype was deduced from her 11 children. Her carrier daughter, III.12, is recombinant for HPT and the distal loci DXS52 and DXS15 and for the proximal locus DXS37, but nonrecombinant for F9 and DXS98; whereas the unaffected son, III.6, is recombinant for HPT and the distal group of loci DXS98, DXS52, and DXS15, and nonrecombinant for the proximal locus DXS37. The minimum number of total recombinants in this pedigree is therefore obtained by locating HPT between F9 and DXS98.

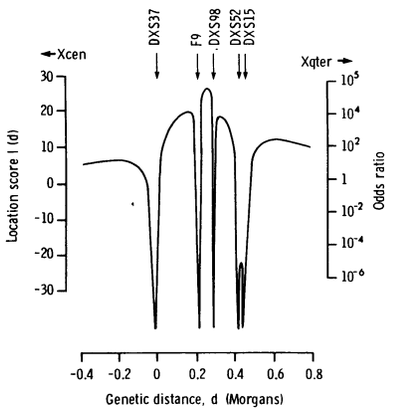

Figure 3. Location scores of HPT versus X chromosome long arm loci DXS37, F9, DXS98, DXS52, and DXS15. The horizontal axis is the genetic distance (d), in Morgans, from the DXS37 locus which is the arbitrary origin. The right vertical axis is the odds ratio for the location of HPT at a given distance compared with a location of HPT at an infinite distance from the five fixed markers. The left vertical axis is the location score, l (d), defined as twice the natural logarithm of the odds ratio. A location of HPT between F9 and DXS98 was favored over all other locations (see Table II).

segregation of the disease (HPT) with the alleles (N, a, 3, and t), defined respectively by the polymorphic loci F9, DXS98, DXS52, and DXS15. Her other affected son, V.I, reveals segregation of HPT with the distal loci DXS98, DXS52, and DXS15 (alleles a, 3, and t), but demonstrates recombination between HPT and the proximal locus F9 (allele n*). This observation locates HPT distal to the F9 locus. Analysis of the 11 children of individual II.4 further helps to localize HPT. The affected male III.15 shows that in this branch of the family HPT is segregating with the alleles (E, a, 3, and t). His carrier sister, III.12, is recombinant for HPT and the distal loci DXS52 and DXS15 and for the proximal locus DXS37, but nonrecombinant for DXS98. This observation locates HPT proximal to DXS52 and distal to DXS37. The combined observations of multipoint crossovers from III.12 and V.1 locate HPT distal to F9 and proximal to DXS52, i.e., in the vicinity of DXS98. Examination of the multipoint cross in the unaffected male, III.6, locates HPT proximal to DXS98; this individual, who has inherited the alleles (a, 3, and t) but has not inherited the disease, demonstrates recombination between HPT and the distal loci DXS98, DXS52, and DXS15, and indicates that the location of HPT is not in the chromosomal segment distal to DXS98. Thus, the combined observations from all the multipoint crosses suggest that HPT is located distal to F9 and proximal to DXS98. The likelihood of this location of HPT versus the other possible locations of HPT within the fixed order Xcen–DXS37–F9–DXS98–DXS52–DXS15–Xqter was quantitatively assessed using the LINKMAP program.

Analysis using the LINKMAP program yielded the location score curve shown in Fig. 3. There is a high peak distal to the F9 locus and proximal to the DXS98 locus, maximum location score = 25.11, 0.03 Morgans proximal to the DXS98 locus. There are five subsidiary peaks between Xcen and DXS37, between DXS37 and F9, between DXS98 and DXS52, between DXS52 and DXS15, and between DXS15 and Xqter. The location score for each peak is 6.08 at 0.20 Morgans proximal to DXS37, 19.40 at 0.05 Morgans proximal to F9, 18.14 at 0.02 Morgans distal to DXS98, −22.34 at 0.006 Morgans proximal to DXS15, and 11.05 at 0.15 Morgans distal to DXS15. The odds ratio for location of HPT in each one of these segments is shown in Table II. This reveals that the odds ratio favoring the order Xcen–DXS37–F9–HPT–DX598–DX552–DX515–Xqter versus a location of HPT unlinked to this cluster of five loci is > 280,000:1. In addition, the odds ratios favoring two other locations of HPT within the framework of the five loci are also significant. The odds ratio for a location of HPT proximal to F9 and distal to DXS37 is 16,300:1, and the odds ratio for a location of HPT distal to DXS98 and proximal to DXS52 is 8,700:1. Thus, a distal as opposed to proximal location of HPT to F9 is 17 times (i.e., 283,500 ÷ 16,300) more likely, and a proximal as opposed to distal location of HPT to DXS98 is 32 times (i.e., 283,500 ÷ 8,700) more likely. These results indicate that HPT maps between F9 and DXS98. All the other odds ratios for possible locations of HPT within this framework of loci are < 1,000:1. These results of multipoint linkage analysis demonstrate that the most likely order of genetic loci is Xcen–DXS37–F9–HPT–DXS98–DXS52–DXS15–Xqter.

Discussion

Our linkage study of X-linked recessive idiopathic hypoparathyroidism (HPT) using 17 polymorphic markers to explore X chromosome recombination has established linkage between HPT and the DXS98 locus defined by the polymorphic marker 4D.8, with the probability in favor of linkage > 6,500:1. The genetic marker 4D.8 has been previously localized by somatic cell hybrid and linkage studies to Xq26–Xq27 (17, 28), and a further analysis with the five genetic markers from this distal segment of Xq established that the probability favoring linkage between HPT and this group of loci was 280,000:1. Thus, the results of our study demonstrating linkage between the disease gene and these genetic markers map HPT to the distal region of the long arm of the X chromosome.

Analysis of the multipoint crosses observed within this distal region of the long arm of the X chromosome, in the pedigree in Fig. 2, suggests that HPT maps between the DXS98 and F9, which encodes coagulation Factor IX. The LINKMAP program is able to use information from a number of multipoint crosses to calculate the most likely location of one

Table II. Order of Genetic Loci and Their Respective Odds Ratios as Calculated from the Location Score Curve in Fig. 3

Locus order	Peak location score	Odds ratio
Xcen–**HPT**–DXS37–F9–DXS98–DXS52–DXS15–Xqter	6.08	20
Xcen–DXS37–**HPT**–F9–DXS98–DXS52–DXS15–Xqter	19.40	16,300
Xcen–DXS37–F9–**HPT**–DXS98–DXS52–DXS15–Xqter	25.11	283,500
Xcen–DXS37–F9–DXS98–**HPT**–DXS52–DXS15–Xqter	18.14	8,700
Xcen–DXS37–F9–DXS98–DXS52–**HPT**–DXS15–Xqter	−22.34	0.1×10^{-4}
Xcen–DXS37–F9–DXS98–DXS52–DXS15–**HPT**–Xqter	11.05	250

unmapped gene in a framework of well-mapped markers (27). Within the order Xcen–DXS37–F9–DXS98–DXS52–DXS15–Xqter, a location of HPT between DXS98 and F9 was favored above all other locations (Table II). The odds favoring the location of HPT proximal to DXS98 are 32:1 and those favoring a location distal to F9 are 17:1. Thus, the locus order

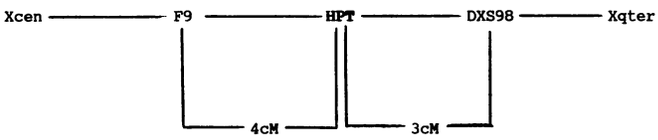

is indicated and reveals two bridging markers for X-linked recessive idiopathic hypoparathyroidism, with the genetic distances between HPT and its nearest markers, DXS98 and F9, being 3 and 4 centi-Morgans (cM), respectively. These genetic distances usually correspond to physical distances of three and four million nucleotide basepairs, but HPT, DXS98, and the F9 loci are likely to be physically much nearer, as the higher frequency of genetic recombination in this region has previously led to an overestimation of physical distances (17, 26). However, the mutation causing HPT does not involve the DXS98 and F9 loci as recombinants have been observed. In addition, plasma Factor IX concentrations, which were assessed in two affected males from family W/81 subsequent to our localization of HPT, were within the normal range, further indicating that the mutation does not involve the F9 locus. The results of our study, which reveals the bridging markers DXS98 and F9, will be useful in the genetic counseling of some affected families.

The mapping of the HPT gene to Xq26–Xq27 demonstrates that a mutation at a locus distant from the PTH gene, whose location (7) is on the short arm of chromosome 11, is involved in altering parathyroid gland function. A possible role for this X-linked gene in parathyroid gland development is suggested by the neonatal or early infantile onset of hypocalcemic seizures in the two families. This suggests that the disorder may be due to parathyroid agenesis or hypoplasia, and a careful autopsy of a patient from one family has supported this (11). Thus, the HPT gene would appear to be important for the embryological development of the parathyroids and the situation may be analogous to that occurring in the DiGeorge syndrome. In this syndrome there is a failure of development of the derivatives of the third and fourth pharyngeal pouches with resulting absence or hypoplasia of the parathyroids and thymus. The syndrome may be inherited as an autosomal dominant disorder (29), and an association between the syndrome and a deletion of the proximal part of the long arm of chromosome 22 has been reported (30, 31). The deletion breakpoint for the DiGeorge syndrome has been further characterized by molecular genetic studies using in situ hybridization (32) and was found to be proximal to the locus for the immunoglobulin lambda polypeptide constant region but distal to the locus for the DNA probe D2259. The precise mapping of the HPT gene to Xq26–Xq27 by our linkage study represents an important step toward understanding this genetic component of parathyroid gland formation. Our localization of this mutant gene identifies the chromosomal segment in which a concentrated search for deletions and closer genetic markers is required to further elucidate the factors controlling parathyroid development and calcium homeostasis.

Acknowledgments

We are grateful to the nursing and technical staff of the Metabolic Research Unit, Shriners Hospital, St. Louis, MO; to P. L. Pearson, L. Kunkel, J. L. Mandel, R. L. Nussbaum, W. T. Brown, and G. Brownlee for the gift of probes; and to F. Rysavy, G. Williams, and M. Smith at the Division of Computer Services at the Clinical Research Centre.

This work was supported by the Medical Research Council (UK) (R. V. Thakker, K. E. Davies, C. Wooding, and J. L. H. O'Riordan) and the Shriners Hospital for Crippled Children (USA) (grant 15958) (M. P. Whyte). R. V. Thakker was an MRC training fellow at the Middlesex Hospital.

References

1. Barr, D. G. D., A. Prader, U. Esper, S. Rampini, V. J. Marrian, and J. O. Forfar. 1971. Chronic hypoparathyroidism in two generations. *Helv. Paediatr. Acta.* 26:507–521.

2. Bronsky, D., R. T. Kiamlko, and S. S. Waldstein. 1968. Familial idiopathic hypoparathyroidism. *J. Clin. Endocrinol. & Metab.* 28:61–65.

3. Peden, V. H. 1960. True idiopathic hypoparathyroidism as a sex-linked recessive trait. *Am. J. Hum. Genet.* 12:323–337.

4. Whyte, M. P., and V. V. Weldon. 1981. Idiopathic hypoparathyroidism presenting with seizures during infancy: X-linked recessive inheritance in a large Missouri kindred. *J. Pediatr.* 99:608–611.

5. McKusick, V. A. 1988. Mendelian Inheritance in Man. 8th ed. John Hopkins University Press, Baltimore. 411, 1009, 1317.

6. Keutmann, H. T., M. M. Sauer, G. N. Hendy, J. L. H. O'Riordan, and J. T. Potts, Jr. 1978. Complete aminoacid sequence of human parathyroid hormone. *Biochemistry.* 12:5723–5729.

7. Naylor, S. L., A. Y. Sakaguchi, P. Szoka, G. N. Hendy, H. M. Kronenberg, A. Rich, and T. B. Shows. 1983. Human parathyroid hormone gene (PTH) is on short arm of chromosome 11. *Somatic Cell Genet.* 9:609–616.

8. Ahn, T. G., S. E. Antonarakis, H. M. Kronenberg, T. Igarashi, and M. A. Levine. 1986. Familial isolated hypoparathyroidism: a molecular genetic analysis of 8 families with 23 affected persons. *Medicine (Baltimore).* 65:73–81.

9. Arnold, A., S. Horst, M. A. Levine, and H. M. Kronenberg. 1989. Mutation of the signal peptide-encoding region of the preproparathyroid hormone gene in familial isolated hypoparathyroidism. *J. Bone Miner. Res.* 4(Suppl):S378.

10. Schmidtke, J., K. Kruse, B. Pape, and G. Sippell. 1986. Exclusion of close linkage between parathyroid hormone gene and a mutant gene locus causing idiopathic hypoparathyroidism. *J. Med. Genet.* 23:217–219.

11. Whyte, M. P., G. S. Kim, and M. Kosanovich. 1986. Absence of parathyroid tissue in sex-linked recessive hypoparathyroidism. *J. Pediatr.* 109:915.

12. Kunkel, L. M., K. D. Smith, S. H. Boyer, D. S. Borgaonkar, S. S. Wachtel, O. J. Miller, W. R. Breg, H. W. Jones, and J. M. Rary. 1977. Analysis of human Y chromosome specific reiterated DNA in chromosome variants. *Proc. Natl. Acad. Sci. USA.* 74:1245–1249.

13. Southern, E. M. 1975. Detection of specific sequences among DNA fragments separated by gel electrophoresis. *J. Mol. Biol.* 98:503–517.

14. Rigby, P. W. J., M. Dieckmann, C. Rhodes, and P. Berg. 1977. Labelling deoxyribonucleic acid by nick translation with DNA polymerase I. *J. Mol. Biol.* 113:237–251.

15. Feinberg, A. P., and B. Vogelstein. 1983. A technique for radiolabelling DNA restriction endonuclease fragments to high specific activity. *Anal. Biochem.* 132:6–13.

16. Shows, T. B., P. J. McAlpine, C. Boucheix, F. S. Collins, P. M. Conneally, J. Frezal, H. Gershowitz, P. N. Goodfellow, J. G. Hall, P. Issitt, et al. 1987. Guidelines for human gene nomenclature: an international system for human gene nomenclature. *Cytogenet. Cell Genet.* 46:11–28.

17. Davies, K. E., J. L. Mandel, J. Weissenbach, and M. Fellous. 1987. Report of the committee on the genetic constitution of the X and Y chromosomes: Ninth International Workshop on Human Gene Mapping. *Cytogenet. Cell Genet.* 46:277–315.

18. Davies, K. E., P. L. Pearson, P. S. Harper, J. M. Murray, T. O'Brien, M. Sarfarazi, and R. Williamson. 1983. Linkage analysis of two cloned DNA sequences flanking the Duchenne muscular dystrophy locus on the short arm of the human X chromosome. *Nucleic Acids Res.* 11:2303–2312.

19. Lathrop, G. M., and J. M. Lalouel. 1984a. Easy calculation of lod scores and genetic risks on small computers. *Am. J. Hum. Genet.* 36:460–465.

20. Brown, W. T., W. Ye, A. C. Gross, C. B. Chan, C. S. Dobkin, and E. C. Jenkins. 1987. Linkage of flanking probes in 40 fragile X families. *Cytogenet. Cell Genet.* 46:587.

21. Carpenter, N. J., B. Bakker, J. C. F. M. Dreesen, A. H. J. T. Brocker-Vrieuds, H. Veenema, E. Briet, and P. L. Pearson. 1987. Genetic order of Xq27-q28 RFLP markers established in Fra (X) and Hem A families. *Cytogenet. Cell Genet.* 46:590.

22. Connor, J. M., H. Osman, L. Strephani, N. C. Nevin, and M. Hofker. 1987. Linkage analysis in families with the fragile X syndrome using CX55.7 (DXS105). *Cytogenet. Cell Genet.* 46:598.

23. Lehesjoki, A. E., V. Rasi, and A. de la Chapelle. 1987. Linkage analysis of two RFLPs closely linked to the F8C gene. *Cytogenet. Cell Genet.* 46:646.

24. Nafa, K., F. Meriane, A. Reghis, M. Benabadji, F. Demenais, M. Delpech, and J. C. Kaplan. 1987. RFLPs in the coagulation factor VIIIc gene (F8C) and linked probe sites (DXS15 and DXS52) in the normal and haemophilic population of Algeria. *Cytogenet. Cell Genet.* 46:666.

25. Patterson, M. N., M. V. Bell, H. R. Dorkins, A. W. King, S. J. Kenwrick, S. Thibodeau, M. Ryynanen, C. Schwartz, and K. E. Davies. 1987. Physical and genetic mapping in the Xq27-qter region of the human X chromosome. *Cytogenet. Cell Genet.* 46:675.

26. Patterson, M., S. Kenwrick, S. Thibodeau, K. Faulk, M. G. Mattei, J. F. Mattei, and K. E. Davies. 1987. Mapping of DNA markers close to the fragile site on the human X chromosome at Xq27.3. *Nucleic Acids Res.* 15:2639–2651.

27. Lathrop, G. M., J. M. Lalouel, C. Julier, and J. Ott. 1984b. Strategies for multi-locus linkage analysis in humans. *Proc. Natl. Acad. Sci. USA.* 81:3443–3446.

28. Boggs, B. A., and R. L. Nussbaum. 1984. Two anonymous X-specific human sequences detecting restriction fragment length polymorphisms in region Xq26-qter. *Somatic Cell Mol. Genet.* 10:607–613.

29. Rhon, R. D., M. S. Leffell, P. Leadem, D. Johnson, T. Rubiot, and B. S. Emmanuel. 1984. Familial third-fourth pharyngeal pouch syndrome with apparent autosomal dominant transmission. *J. Pediatr.* 105:47–51.

30. de la Chapelle, A., R. Herra, M. Koivisto, and P. Aula. 1981. A deletion in chromosome 22 can cause Di George syndrome. *Hum. Genet.* 57:253–256.

31. Kelley, R. I., F. H. Zackai, B. S. Emmanuel, M. Kistenmacher, F. Greenberg, and H. H. Punnett. 1982. The association of the Di George anomalad with partial monosomy of chromosome 22. *J. Pediatr.* 101:197–200.

32. Cannizzarro, L. A., and B. S. Emmanuel. 1985. *In situ* hybridisation and translocation breakpoint mapping. II. Di George syndrome with partial monosomy of chromosome 22. *Cytogenet. Cell Genet.* 39:179–183.